Owner's Manual

Please read this guide carefully before use.

Manual de instrucciones

Lea atentamente antes de su utilización.

Manuel d'instruction

Lire attentivement avant toute utilisation.

IMPORTANT SAFETY INSTRUCTIONS

When using an electrical appliance, basic precautions should always be followed, including the following:

READ ALL INSTRUCTIONS BEFORE USING THIS VACUUM CLEANER

SAVE THESE INSTRUCTIONS

THIS APPLIANCE IS INTENDED FOR HOUSEHOLD USE ONLY

WARNING

TO REDUCE THE RISK OF FIRE, ELECTRIC SHOCK OR INJURY:

1 Do not leave plugged in. Unplug from electrical outlet when not in use and before servicing.

2 Do not use outdoors or on wet surfaces or to vacuum water or other liquids – electric shock and personal injury could occur.

3 Do not allow to be used as a toy. Close attention is necessary when used by or near children.

4 You are responsible for making sure that your vacuum cleaner is not used by anyone unable to operate it properly.

5 Use only as described in this manual. Use only with Dyson recommended or approved attachments and accessories.

6 Check to ensure your electricity supply corresponds to that shown on the rating plate, which can be found on the base of the machine between the wheels. The machine must only be used as rated.

7 Do not use with a damaged cord or plug. If the machine is not functioning properly, has been dropped, damaged, left outdoors, or immersed in liquid, contact the Dyson Helpline on 1-866-693-9766.

8 Do not pull or carry by the cord, do not use the cord as a handle, do not close a door on the cord or pull the cord around sharp edges or corners. Do not run the machine over the cord. Keep the cord away from heated surfaces and open flames.

9 Do not unplug by pulling on the cord. To unplug, grasp the plug, not the cord.

10 Do not handle the plug or machine with wet hands.

11 Do not use the machine without the clear bin™ and the filters in place.

12 Do not put any objects into openings in the machine. Do not use with any opening blocked; keep free of dust, lint, hair and anything that may reduce air flow.

13 Keep hair, loose clothing, fingers, and all parts of body away from openings in the machine and moving parts such as the brushbar.

14 Do not use the machine to pick up sharp hard objects, small toys, pins, paper clips etc. They may damage the machine.

15 The use of an extension cord is not recommended.

16 Store the machine indoors. Put the machine away after use to prevent tripping accidents, with the cord coiled safely.

17 Turn off all controls before unplugging.

18 Take extra care when cleaning on stairs; always work with the machine at the bottom of the stairs. Do not put on chairs, tables etc, keep on the floor.

19 Do not pick up anything that is burning or smoking, such as cigarettes, matches, or hot ashes.

20 Do not use to pick up flammable or combustible liquids, such as gasoline, or use in areas where they may be present.

21 When vacuuming, certain carpets may generate small static charges in the clear bin or wand. These are not associated with the electricity supply. To minimize any effect from this, do not put your hand or insert any object into the clear bin unless you have first emptied it and rinsed it out with cold water.

22 Use only identical replacement parts.

23 Do not carry out any maintenance or repair work other than that shown in this manual or advised by the Helpline.

Owner's Manual

Please read this guide carefully before use.

Contents

Important safety instructions	Page 2
Assembling your DCO7	4
Using your DCO7	6
Using the tools	8
Emptying the clear bin™	10
Cleaning the lifetime filter	12
Where to look for blockages	14
Warranty and customer care	16

Box contents

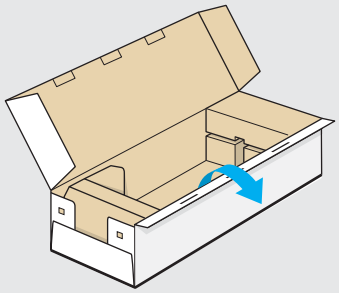

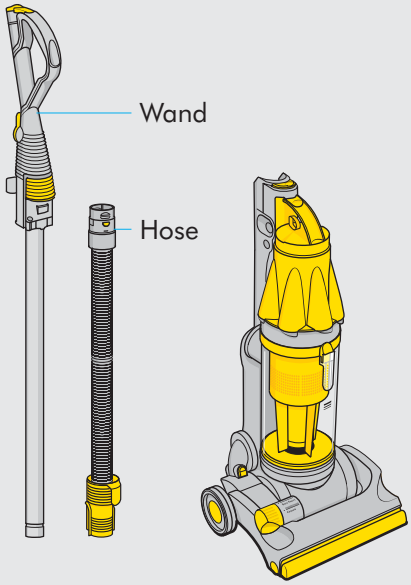

Stair tool

Brush tool

Crevice tool

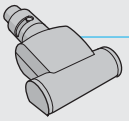

Animal™ turbo tool
Supplied with certain models only, or available as an accessory.

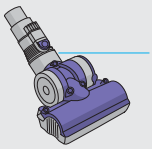

Mini turbine head
Supplied with certain models only, or available as an accessory.

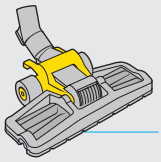

Floor tool
Supplied with certain models only, or available as an accessory.

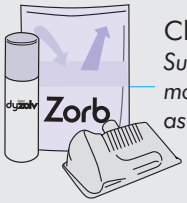

Cleaning Kit
Supplied with certain models only, or available as an accessory.

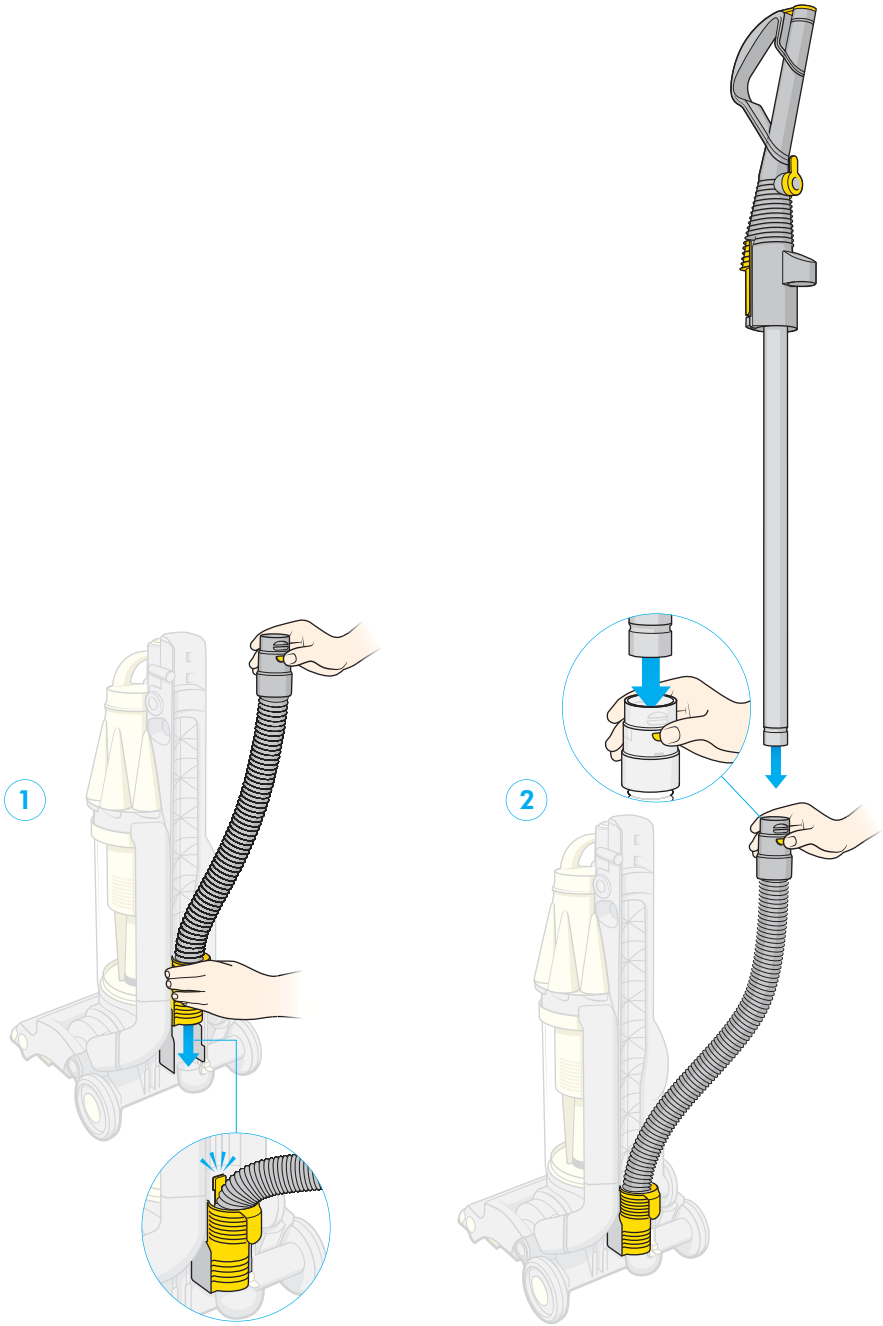

Assembling your DCO7

This machine was inspected and packaged carefully before being shipped from the factory.

If you need assistance during assembly or operation, please call the Dyson Helpline on 1-866-693-9766.

1 Slide the hose into the guides at the back of the machine, pushing the tab securely into place.

2 Pressing the wand release button, slide the wand down **inside** the hose.

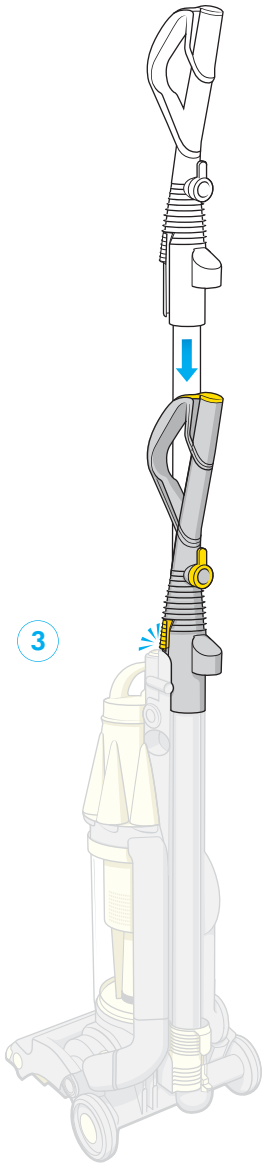

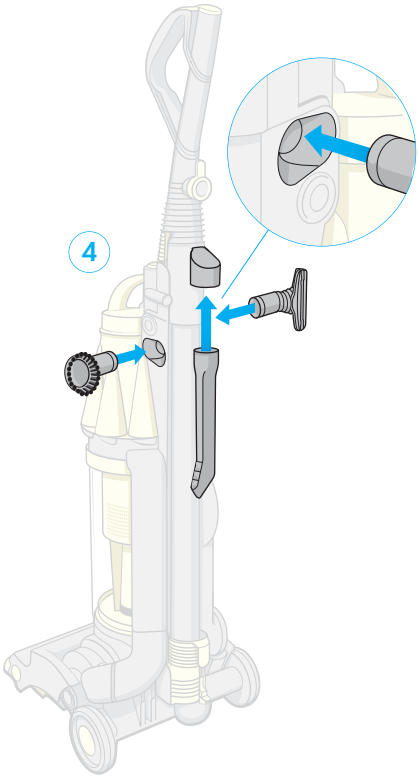

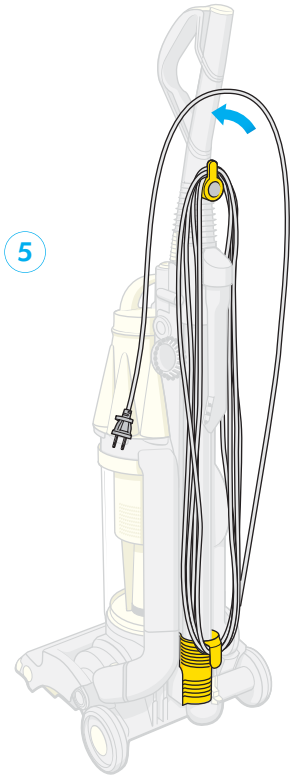

3 Slide the wand into the top of the machine until it clicks securely into place. You may need to press firmly and should hear a 'click' sound.

4 Push the brush and stair tools securely into the storage holes on either side of machine. Fit the crevice tool into the tool clip on the back of the wand.

5 Store the cord safely by winding counter-clockwise around the cord winders and securing with the cord clip.

Using your DCO7

⚠ WARNING

- To reduce the risk of electric shock and personal injury, this appliance has a polarized plug (one blade wider than the other). This plug will fit in a polarized outlet only one way. If the plug does not fit fully in the outlet, reverse the plug. If it still does not fit, contact a qualified electrician to install the proper outlet. Do not force the plug into the outlet. Do not alter the plug in any way.

⚠ CAUTION

- Keep hair, loose clothing, fingers, and all parts of the body away from openings and moving parts.
- This machine is fitted with a belt protection system. If any item becomes caught in the brushbar (e.g. rug fringe), you will hear a loud 'ratchet' warning noise. To rectify, turn the machine off, disconnect from the electrical outlet and clear any obstruction (see page 15), checking that the brush control is set to the correct position for the floor surface before re-starting the machine.

Please note: This machine is intended for domestic use only. Fine dust such as plaster dust or flour should only be vacuumed in small amounts.

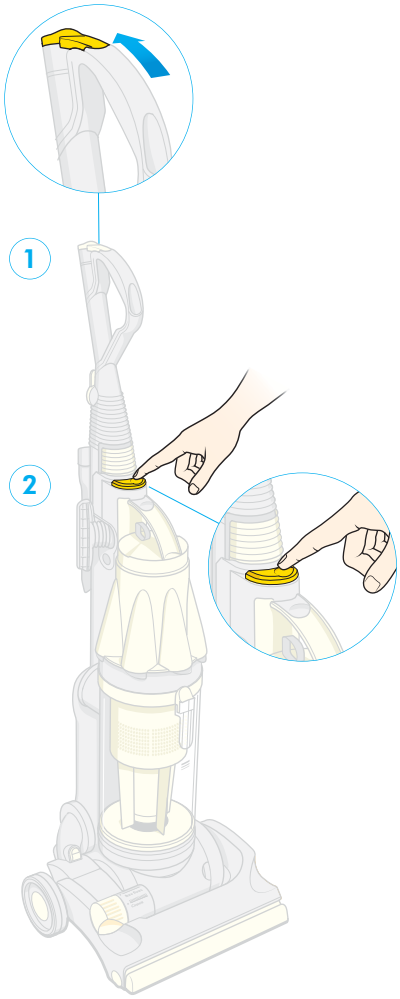

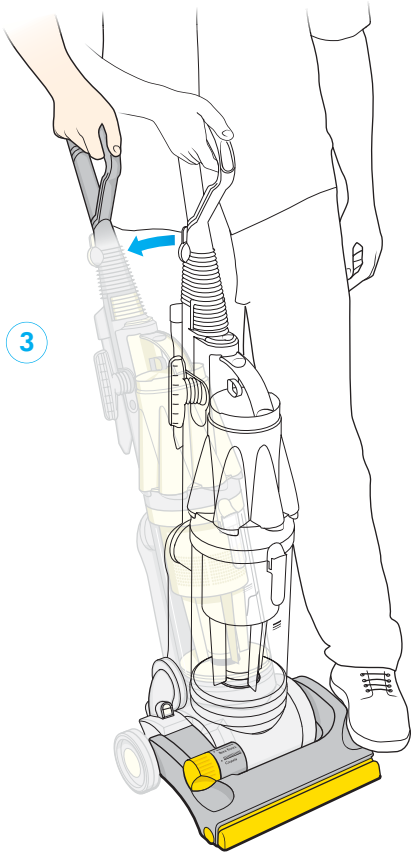

Switching on/off

1 Make sure you have read and understood all safety instructions before using the machine for the first time. The wand cap should be closed when not using the tools.

2 Plug into electrical outlet and press the on/off switch.

3 To start vacuuming, push the front of the cleaner head down with your foot and tilt the handle backwards.

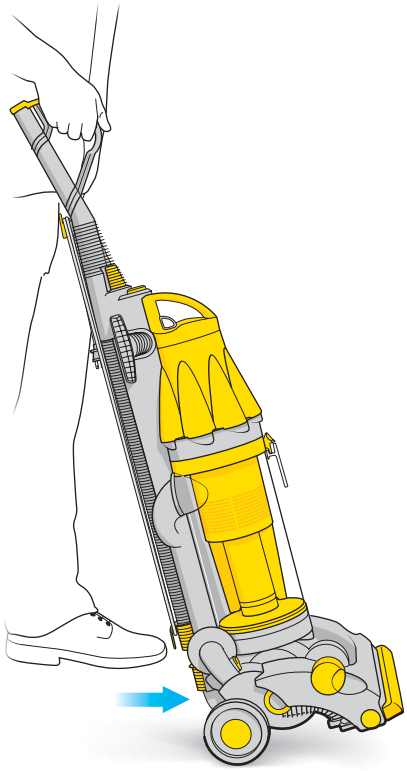

Transporting your Dyson

To move the machine from room to room, ensure it is upright, with the cord stored on the cord winders and the wand securely in place. Tilt back on the rear wheels and push forward.

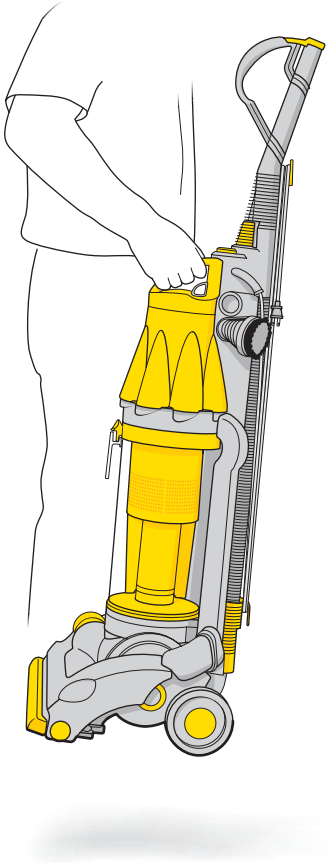

Carrying your DCO7

Your DCO7 should be lifted by using the carry handle.

⚠ CAUTION

- Do not shake the machine when carrying.
- For your safety do not press the cyclone release catch when carrying your machine.

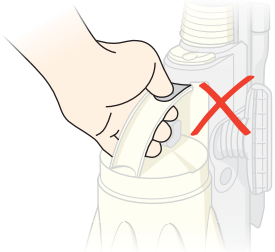

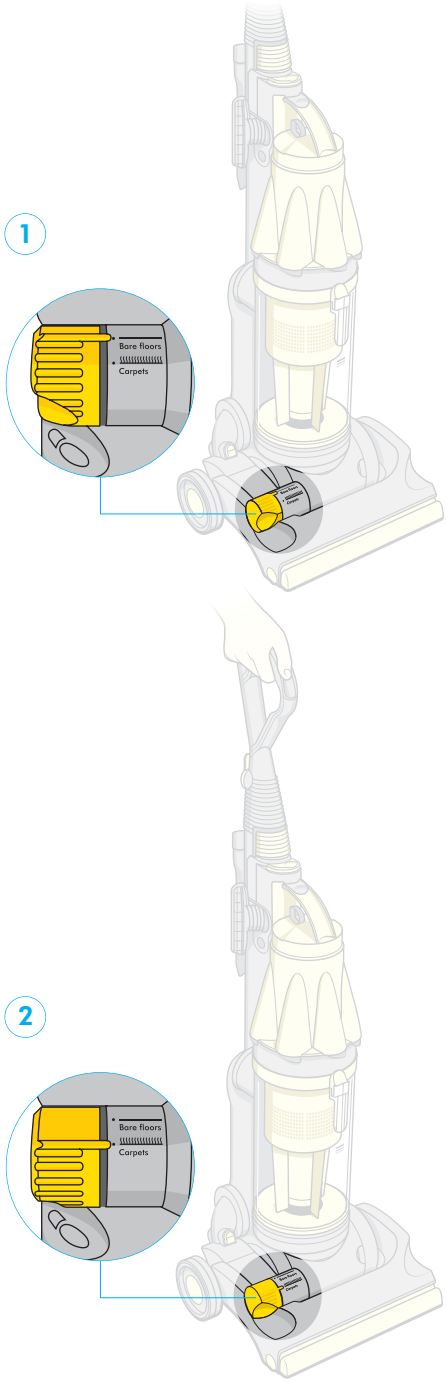

Brush control system

1 **Bare floors**: Use this setting to stop brushbar from turning when vacuuming delicate rugs and bare floors.

2 **Carpets**: Use this setting so brushbar turns when vacuuming carpets.

Note: the brushbar will not turn until you begin to vacuum.

Using the tools

Choosing the right tool

The tools allow you to clean surfaces above the floor and to reach hard to clean areas. Ensure the machine is in an upright position before using tools.

A **Brush tool** – with soft bristles to dislodge dust and cobwebs. The brush head twists to make cleaning easier.

B **Stair tool** – with velour strips to pick up hairs and an agitating edge to lift the carpet. The tool channels airflow downward for better pick-up without sticking to upholstery. The head twists to make cleaning easier.

C **Crevice tool** – reaches deep into nooks and crannies. Ideal for cleaning along baseboards and in tight corners. The tool channels airflow downward for better pick-up without sticking.

D **Animal™ turbo tool/Mini turbine head** – the air powered brushbar ensures effective removal of pet hair and fibers in confined spaces such as stairs, upholstery and in the car. Supplied with certain models only, or available as an accessory for other models – contact the Dyson Helpline or www.dyson.com to order.

E **Floor tool** – to reach under furniture. Adjustable for hard floors or carpets. Maintains perfect contact with the floor to optimize pick-up. Supplied with certain models only, or available as an accessory for other models – contact the Dyson Helpline or www.dyson.com to order.

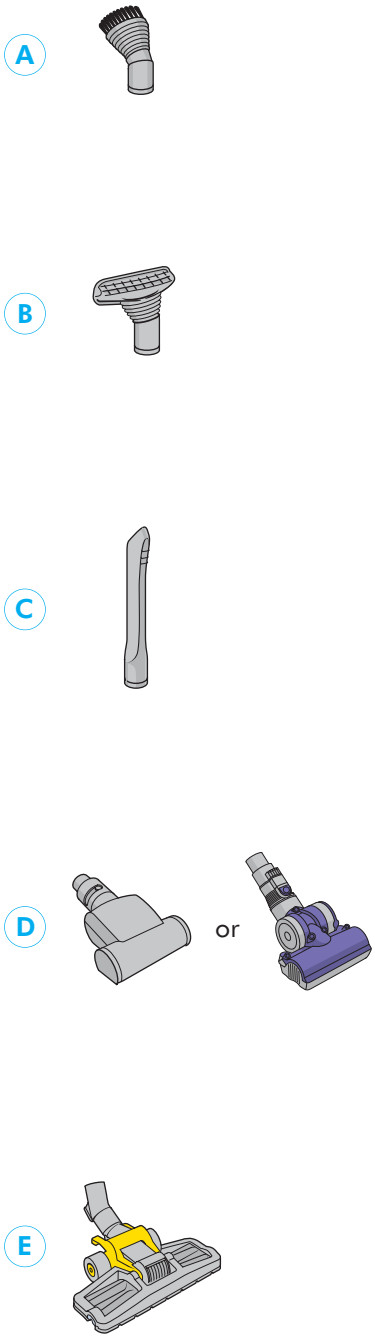

How to clean your tools

The brush tool, stair tool and crevice tool may be washed in warm water with a detergent. Rinse and air dry thoroughly before using. You may wipe the outside of the floor tool or turbo tool/mini turbine head with a damp cloth, but do not submerge in water. Do not attempt to clean any tools when they are attached to the machine.

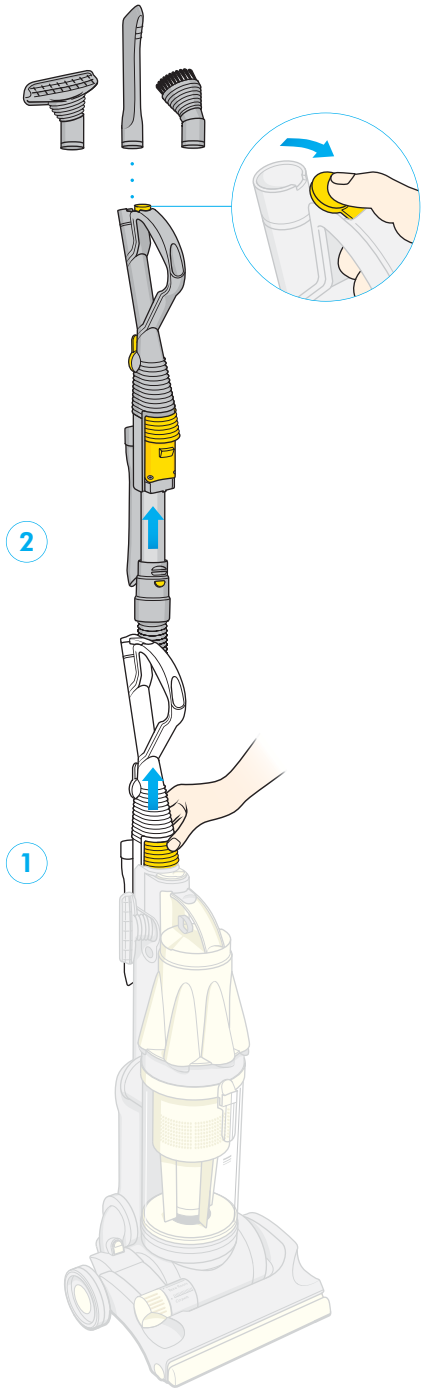

Attaching tools

1 Press the quick-draw hose release to detach the hose/wand from the machine.

2 Slide the wand to the end of the hose.

All Dyson tools can be used in the following ways:

Wand mode

Slide back the wand cap and fit one of the tools directly on to the wand handle.

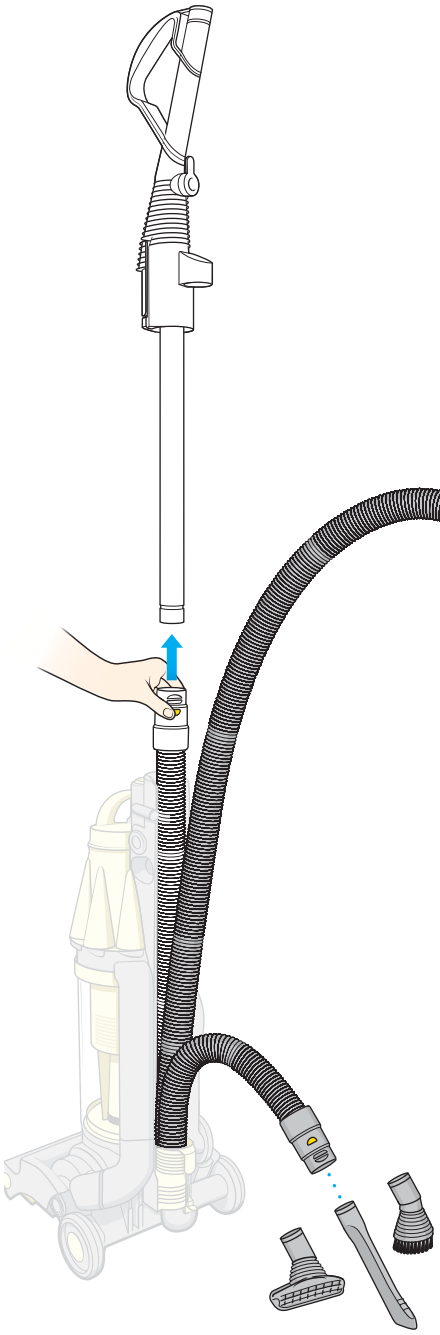

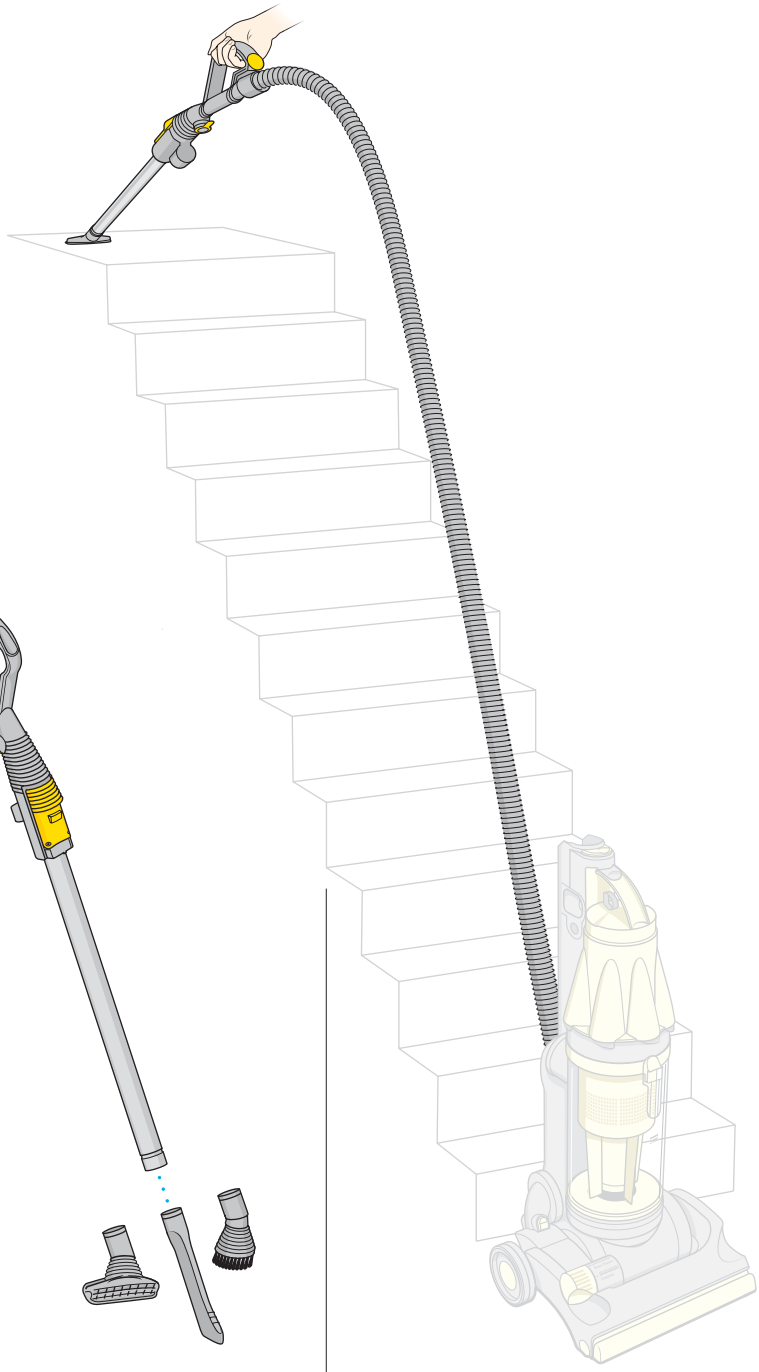

Hose mode

Press the wand release button and remove the wand. Fit one of the tools directly on to the end of the hose. Use tools for confined spaces such as car cleaning.

FOR YOUR SAFETY

- When the hose is fully extended, grasp firmly by the hose, not the tool.

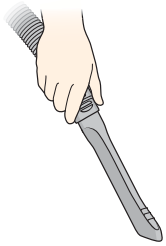

Reversed wand mode

Reverse the wand and click into the end of the hose, pressing the wand release button to ensure a correct fit. Fit one of the tools on to the end of the wand. Use tools for easier handling in hard to reach areas.

Stair cleaning

Use the hose and stair tool or turbo tool for stair cleaning. The hose will stretch all the way to the top of an average staircase so you can leave your machine at the bottom.

CAUTION

- To avoid personal injury and to prevent the machine from falling when cleaning stairs, always place it at the bottom of the stairs.

Emptying the clear bin™

⚠ CAUTION

- Disconnect the machine from the electrical outlet before emptying the bin. Failure to do so could result in electric shock or personal injury.

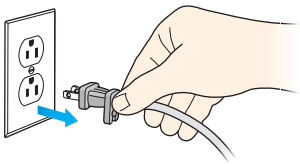

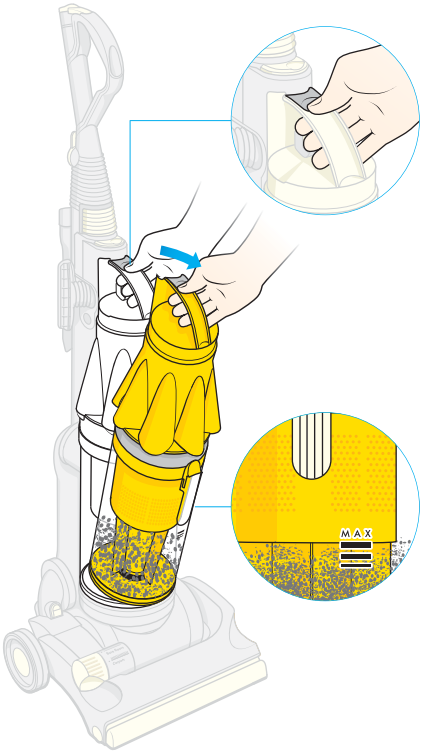

To ensure your machine continues to clean effectively, the clear bin™ must be emptied when the dust reaches the **MAX** mark.

Press the cyclone release catch with your thumb to remove the clear bin™ assembly from the machine.

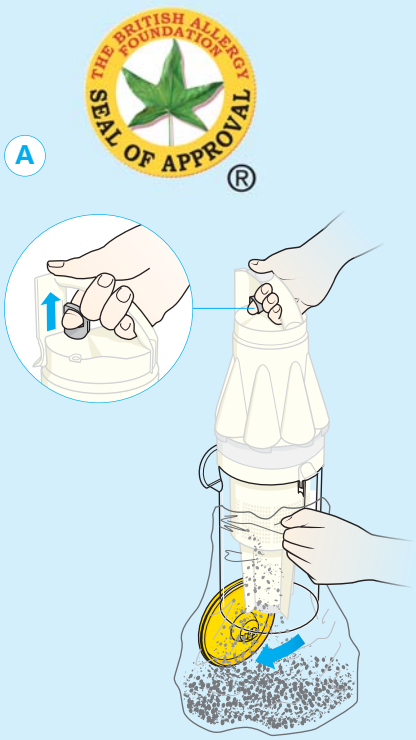

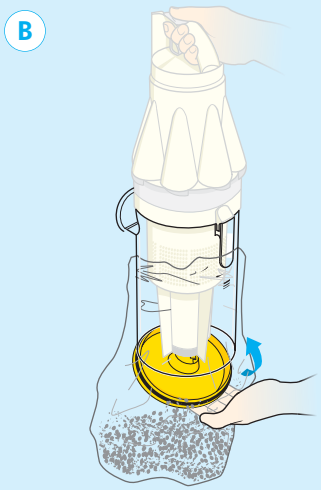

Clear bin emptying option 1

Recommended for asthma/allergy sufferers.

Wipe the outside of the clear bin™ with a damp cloth.

A Place the bin inside a bag, close the bag around the bin and pull the trigger to release dust. Shake or tap firmly to remove all dust from inside the fine dust collector.

B Let the dust settle, then press firmly on the center of the bin base to close before removing from the bag. Seal the bag carefully and replace the bin.

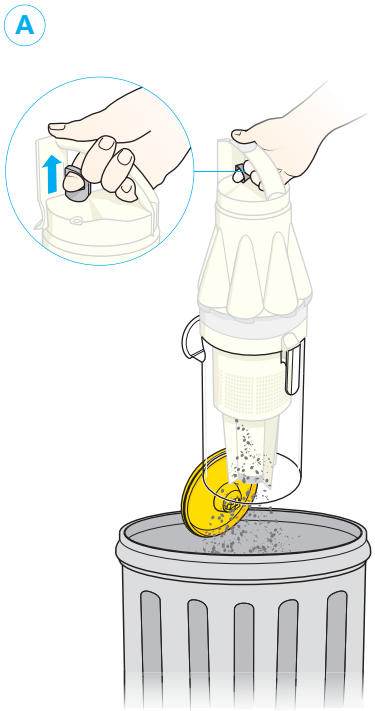

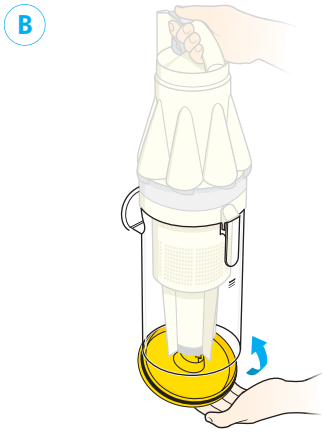

Clear bin emptying option 2

A Pull the trigger to release dust directly into a garbage can or wastebasket. Shake or tap firmly to remove all dust from inside the fine dust collector.

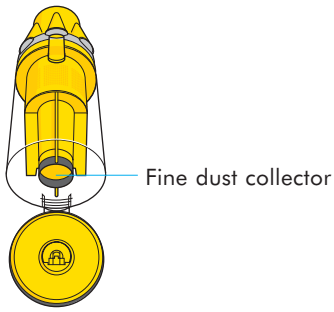

B Press firmly on the center of the clear bin™ base to close.

A

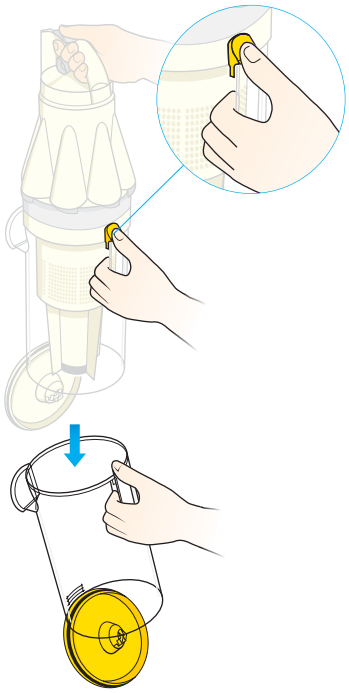

B

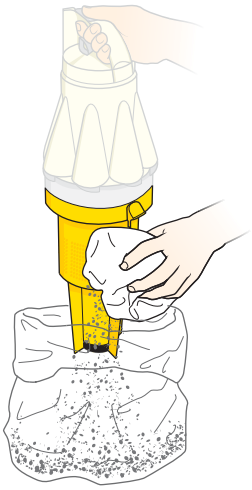

C

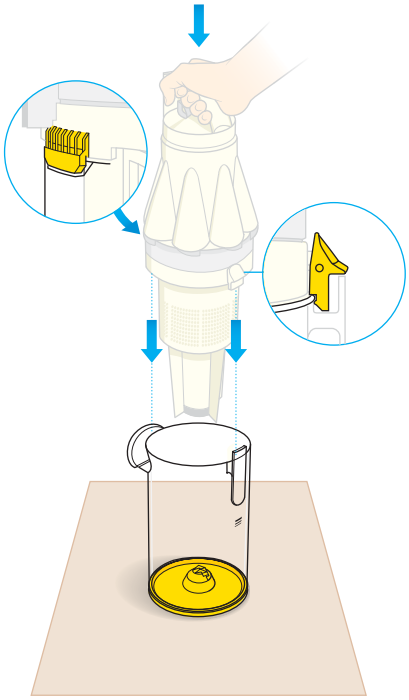

D

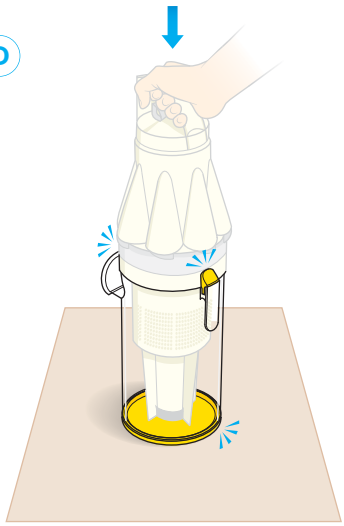

The British Allergy Foundation is a UK national charity with the aim of improving awareness, prevention and treatment of allergies.

The British Allergy Foundation Seal of Approval is a UK registered trademark.

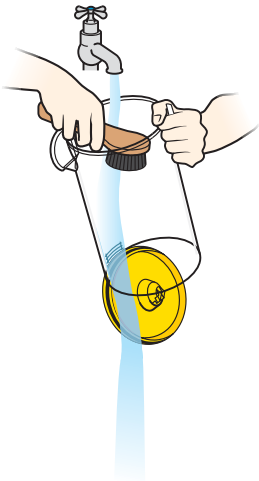

Shroud cleaning

(when necessary)

To remove any build-up of lint or large dust particles on the shroud:

Ensure the clear bin™ is empty and the clear bin™ base is open.

A Press the bin release catch to remove the clear bin.

B Clean the shroud with a cloth or dry brush to remove the lint and dust.

⚠ CAUTION

- Do not use the machine without the clear bin™ in place.

To reassemble the clear bin™, place on the floor with the clear bin base closed.

C Holding the carry handle, put the cyclone assembly inside the clear bin™, line up the front and rear catches and push down to click the catches into place.

D Ensure the clear bin™ is secure before replacing on the machine.

Clear bin™ cleaning

(optional)

- *You may rinse the clear bin™ with water. Rinse only the clear bin™ – do not rinse the inner cyclone, shroud or cones.*
- *Do not use detergents.*
- *Do not immerse any other part of the machine in water.*
- *Ensure the clear bin™ is completely dry before replacing.*

Cleaning the lifetime filter

CAUTION

- Disconnect the machine from the electrical outlet before removing filter. Failure to do so could result in electric shock or personal injury.

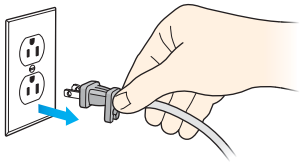

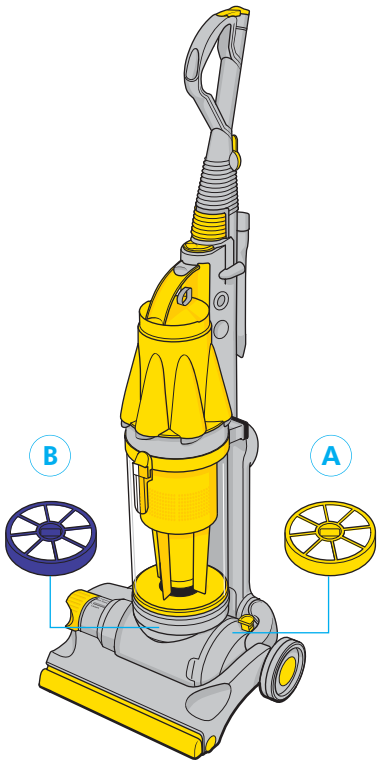

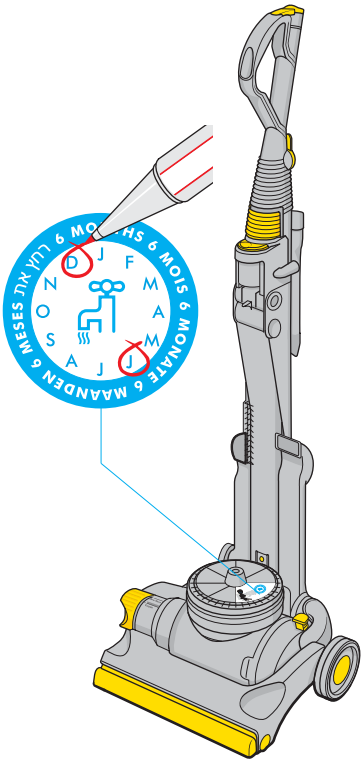

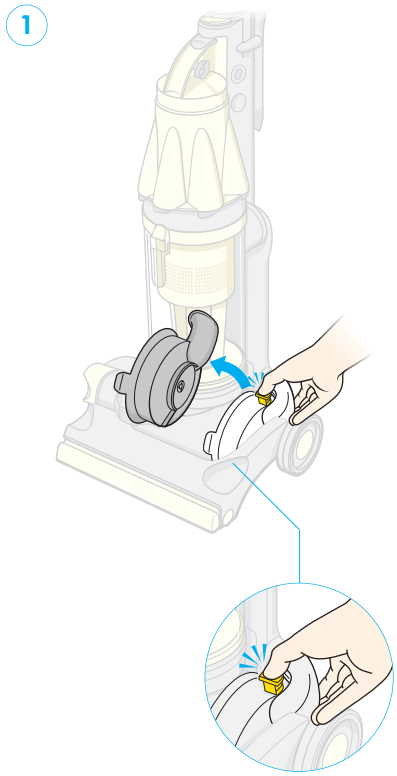

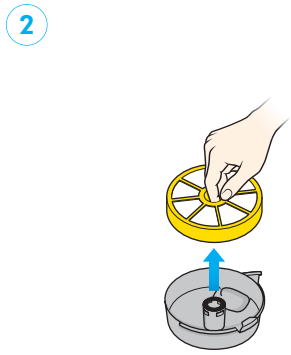

A Lifetime pre-motor filter
Rinse at least once every six months in accordance with the instructions opposite.
If machine is regularly used for vacuuming very fine dust such as plaster dust or carpet fresheners, you may need to rinse more often.

B Lifetime post-motor filter
This is a permanent lifetime filter – it does not require rinsing or replacement.
Do not remove or attempt to rinse this filter.

To remind you when to rinse your pre-motor filter, circle your two 6-monthly rinses on the sticker provided under the clear bin.

1. Press the filter release catch to remove the filter housing from the machine.
2. Remove the filter from the housing.

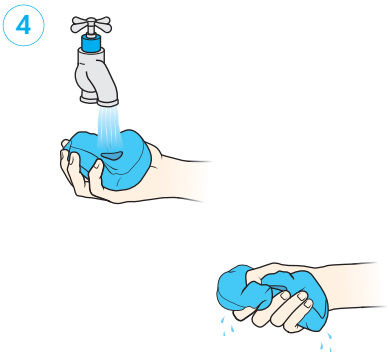

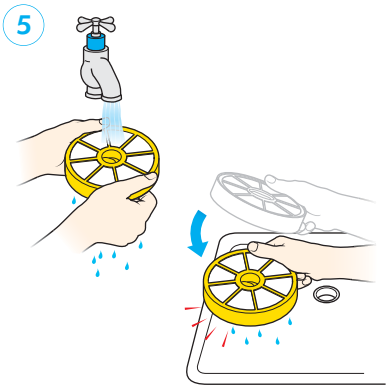

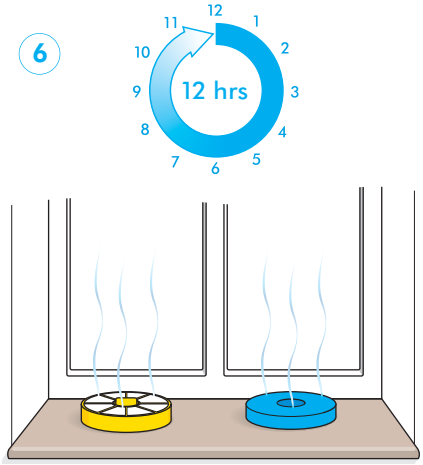

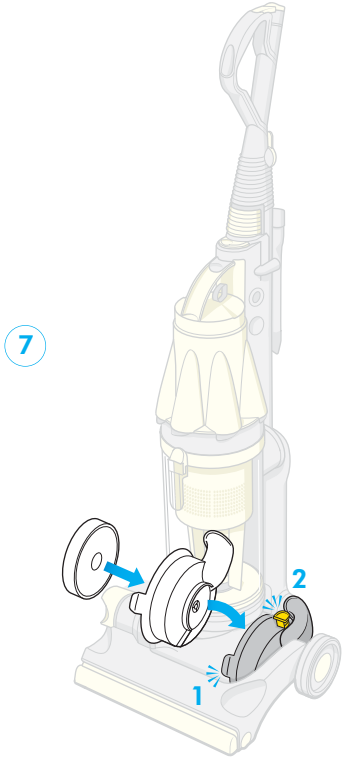

Only the blue foam pad and the yellow cage should be rinsed – not the filter housing.

3 Submerge the filter and cage in cold water and rinse thoroughly.

⚠ CAUTION

- Rinse in cold water only.
- Do not use detergent.
- Do not put in a washing machine or dishwasher.

4 Rinse the blue foam pad and squeeze gently, repeating until the water runs clear.

5 Rinse the yellow cage and tap firmly, repeating until the water runs clear.

6 Leave in a warm place to dry for 12 hours. Make sure the filter is completely dry before replacing in the machine.

⚠ CAUTION

- Do not dry in an oven or microwave.
- Do not dry in a clothes dryer.
- Do not dry near an open flame.

7 When the blue filter pad and yellow cage are completely dry, replace in the filter housing and click back into machine, pressing points **1** and **2** firmly to secure.

⚠ CAUTION

- Do not use the machine without the filter in place.

Where to look for blockages

CAUTION

- Disconnect the machine from the electrical outlet before starting to look for blockages. Failure to do so could result in electric shock or personal injury.

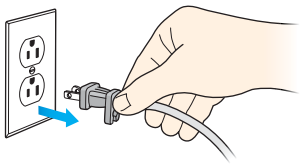

Please note: Should any part of the machine become blocked, the motor may overheat and stop due to the thermal cut-off being triggered. Disconnect from electrical outlet and let the machine cool down for at least 30 minutes before clearing the blockage.

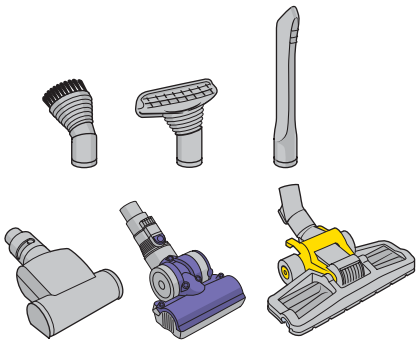

Tools

Check that the tools are clear of blockages.

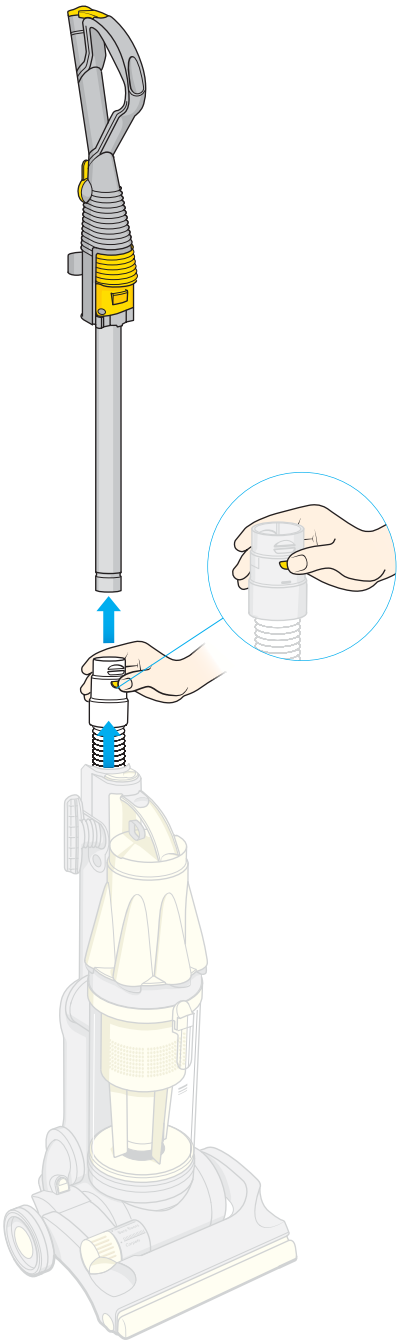

Wand

Press the wand release button to remove the wand from the hose. Check inside wand for blockages.

CAUTION

- Beware of sharp objects when clearing blockages.

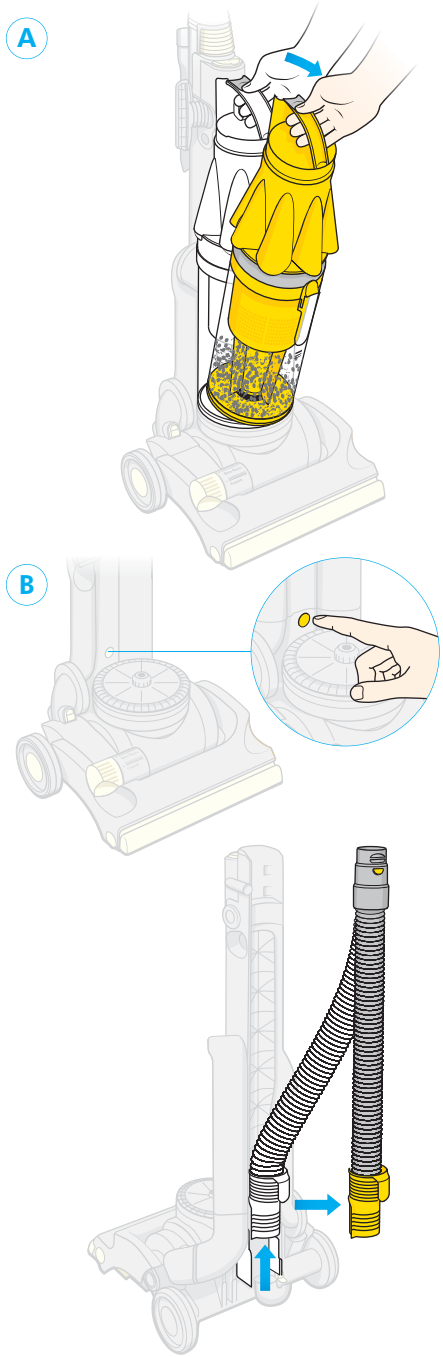

Hose

A Press the cyclone release catch to remove the clear bin assembly from the machine.

B Press the hose release button from the front of machine and slide the hose out from the rear, holding the lower cord winder. Check inside the hose for blockages.

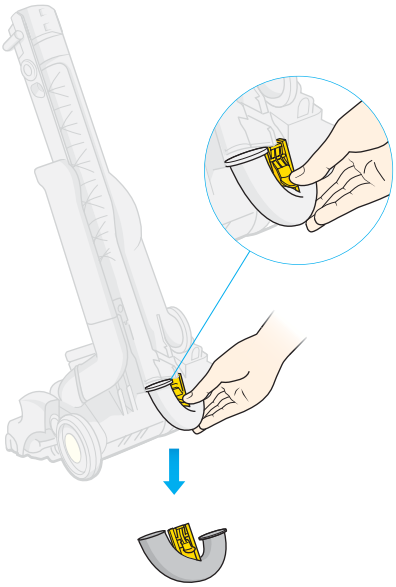

U-bend airway inspection

- Tilt the machine forward to slide out the U-bend airway inspection.
- Check inside for blockages.

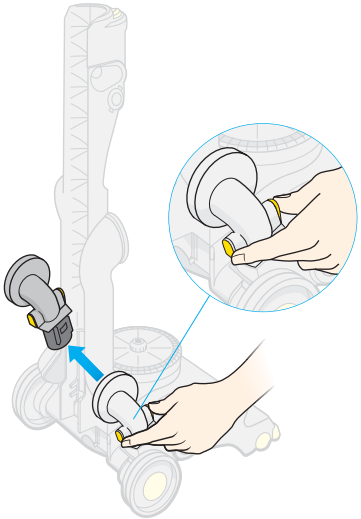

Airway inspection valve

- Squeeze the valve release catches to remove the airway inspection valve.
- Check inside for blockages.

CAUTION

- The ratchet noise warns that the brushbar is obstructed. Disconnect the machine from the electrical outlet before removing the obstruction.

1

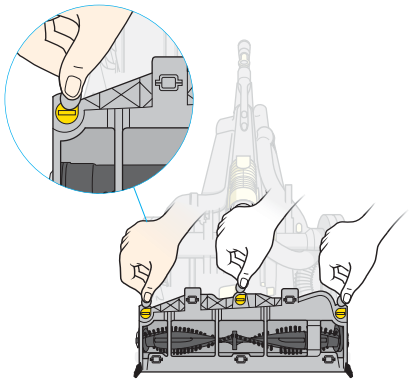

2

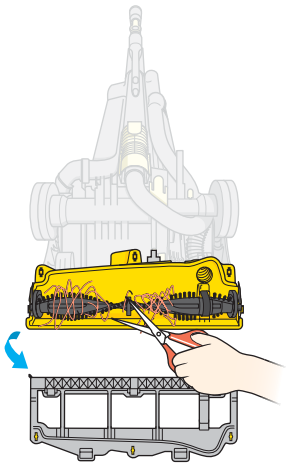

Brushbar

Lay the machine on its front.

1 Undo the colored soleplate fasteners using a coin and remove the soleplate.

2 Clear the brushbar obstruction, carefully cutting away any threads with a pair of scissors.

Replace the soleplate and tighten the fasteners.

CAUTION

- Make sure all parts have been replaced securely before using your machine.

Household 2 year limited warranty

Domestic use

Your Dyson vacuum cleaner is warranted against original defects in material and workmanship for a period of two years from date of purchase, when used for private household purposes and in accordance with the Owner's Manual. This warranty provides, at no cost to you, all labor and parts to place your vacuum cleaner in proper operating condition during the warranty period.

For further details of the warranty including limitations and exclusions, and to register your purchase, please refer to the product registration form found in your instruction pack.

Dyson customer care

If you have a question about your Dyson vacuum cleaner, call the Dyson Helpline on 1-866-693-9766 with your serial number and details of where/when you bought the cleaner. The serial number can be found on the base of your machine between the wheels.

Most questions can be solved over the phone by one of our Helpline staff.

If your cleaner needs service, call the Dyson Helpline we will discuss with you the options available for service. If your machine is under warranty, your machine will be repaired at no cost to you. To reach the Dyson Helpline call on 1-866-693-9766, or visit Dyson online at www.dyson.com.

This product is protected by the following intellectual property rights:

Patent/Patent Application numbers: CA 1,241,809; US 4,573,236; US 6,526,623; CA 2,313,177; US 6,691,849; CA 2,315,078; US 6,289,553; CA 2,325,953; US 6,425,931; US 6,461,508; CA 2,351,552; US 6,572,078; CA 2,346,382; US 6,519,807; US 6,442,791; CA 2,400,404; US 10/220,039; CA 2,438,855; US 10/468,653; US10/363,918; CA 2,439,250; US10/468,676; CA 2,439, 032; US10/468,870; CA 2,438,077; US10/640,558; CA 2,442,218;US 10/474,684; CA 2,438,069; US 10/468,442; CA 2,438,079; US 10/468,304; CA 2,438,073; US 10/467,671

Registered Design/Application numbers: CA 97,332; USD 475,820; CA 86192; US D427,737; CA 107215

Please note: Small details may vary from those shown.